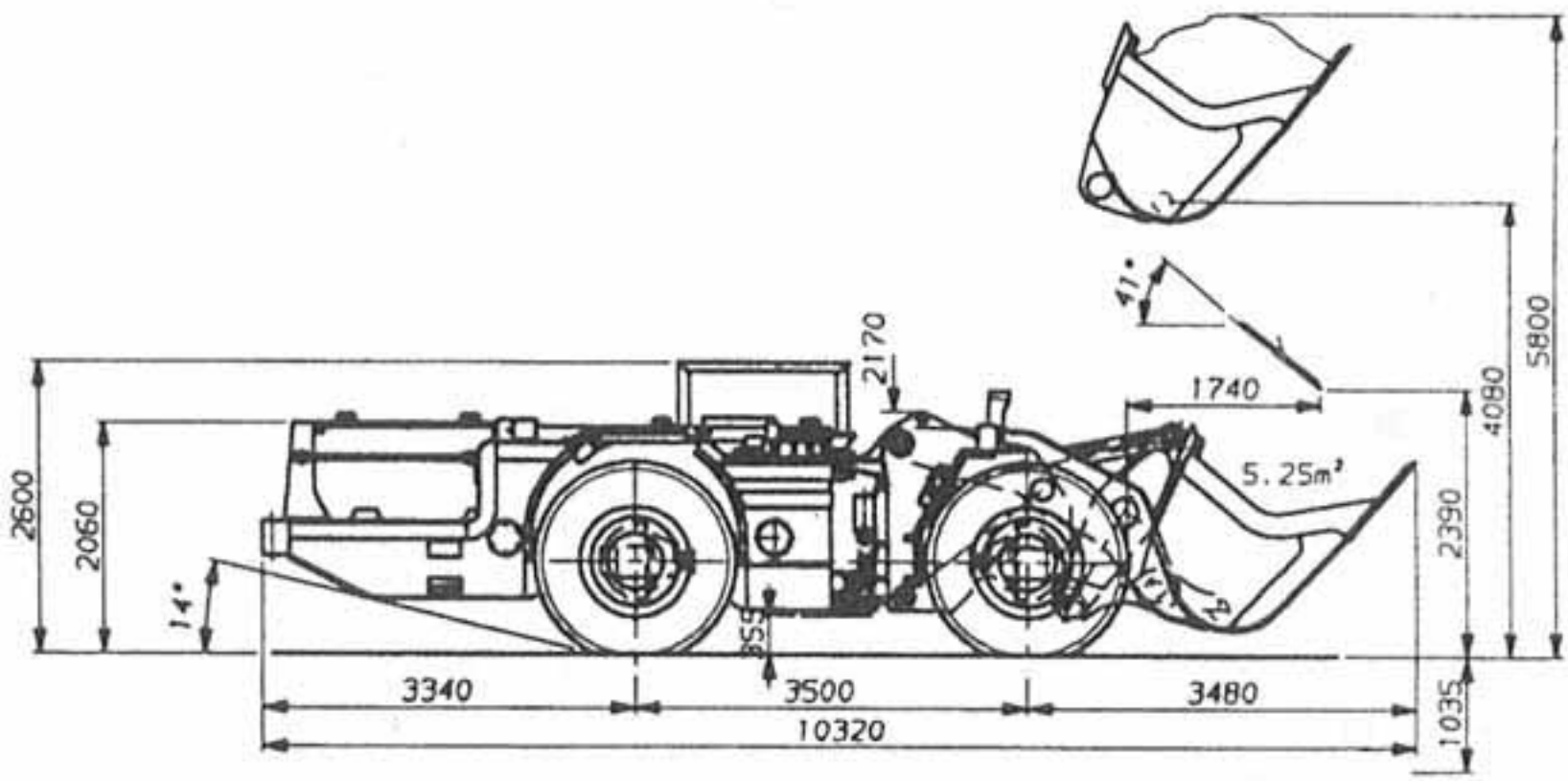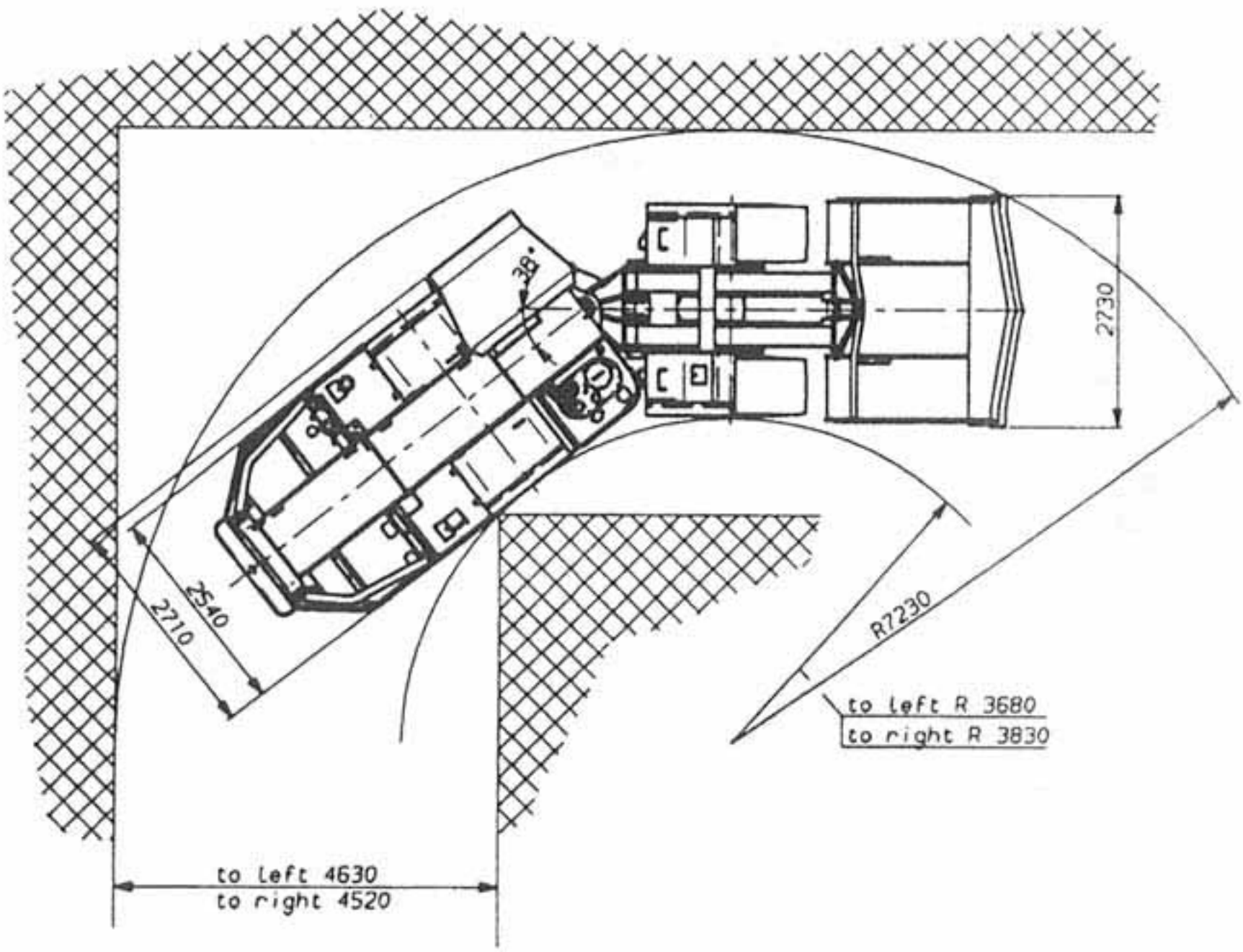MAIN DIMENSIONS